BATTERY DATA SHEET

TÜVRheinland CERTIFIED

OFFICIAL OEM SUPPLIER

BS BATTERY

SLA
FACTORY ACTIVATED

SLA | READY TO START

REF BB14A-A2

12V VOLTAGE - V

170A CCA - A

14.7Ah CAPACITY - Ah (20Hr)

14Ah CAPACITY - Ah (10Hr)

TECHNOLOGY

- Designed according to AGM technology (Absorbed acid)
- VRLA battery type
- Activated and pre-charged batteries
- Homologated by OEM

FEATURES

- AGM construction (Absorbed Glass Material)
- VRLA battery (Valve Regulated Lead Acid)
- Factory activated
- Environmentally friendly, spillproof design
- Multi-positional fitment
- Absolutely Maintenance free
- Sealed, no gas emission through venting hole (under normal operation)
- Ready & Easy to use
- No acid handling - Very safe
- Increased power & Extended life
- Extreme vibration resistance

UPGRADE FOR

-

WEIGHT

Battery (with acid) :	Approx 5.01kg (11.05 lbs)

MOUNTING ANGLE

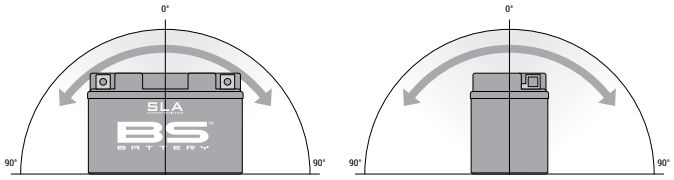

High inclinaison

DIMENSIONS

Length (A) :	134±2mm (5.28 in)
Width (B) :	88±2mm (3.46 in)
Container height :	176±2mm (6.93 in)
Total height (C) :	176±2mm (6.93 in)

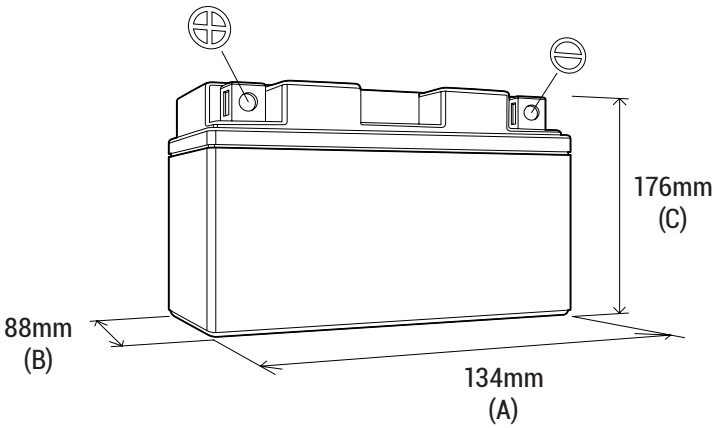
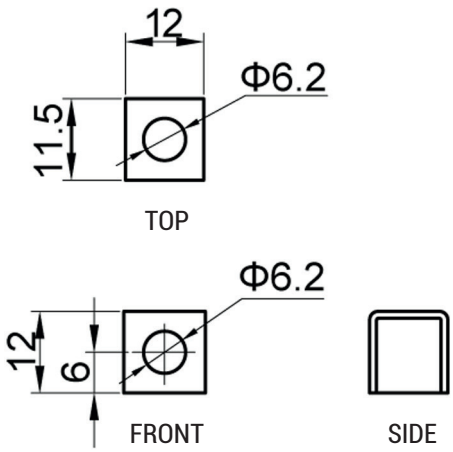
TERMINALS